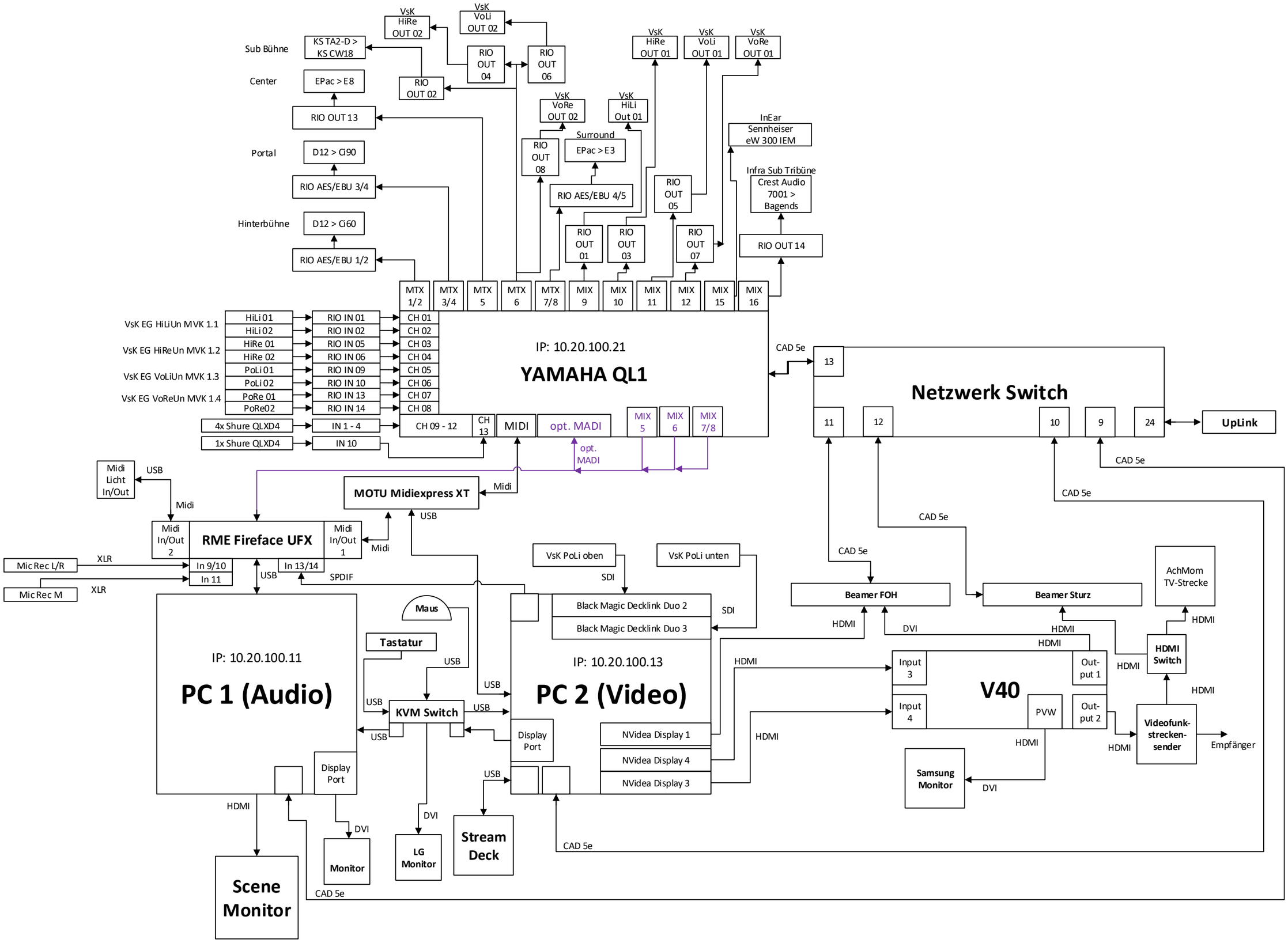
VsK HiRe OUT 02
VsK VoLi OUT 02
Sub Bühne
KS TA2-D > KS CW18
RIO OUT 04
RIO OUT 06
VsK HiRe OUT 01
VsK VoLi OUT 01
VsK VoRe OUT 01
Center
EPac > E8
RIO OUT 02
VsK VoRe OUT 02
VsK HiLi Out 01
InEar
Sennheiser eW 300 IEM
RIO OUT 13
Surround
RIO OUT 08
EPac > E3
Portal
D12 > Ci90
Infra Sub Tribüne
Crest Audio 7001 > Bagends
RIO AES/EBU 3/4
RIO AES/EBU 4/5
RIO OUT 05
Hinterbühne
D12 > Ci60
RIO OUT 01
RIO OUT 03
RIO OUT 07
RIO OUT 14
RIO AES/EBU 1/2
MTX 1/2
MTX 3/4
MTX 5
MTX 6
MTX 7/8
MIX 9
MIX 10
MIX 11
MIX 12
MIX 15
MIX 16
VsK EG HiLiUn MVK 1.1
VsK EG HiReUn MVK 1.2
VsK EG VoLiUn MVK 1.3
VsK EG VoReUn MVK 1.4
HiLi 01
HiLi 02
HiRe 01
HiRe 02
PoLi 01
PoLi 02
PoRe 01
PoRe02
RIO IN 01
RIO IN 02
RIO IN 05
RIO IN 06
RIO IN 09
RIO IN 10
RIO IN 13
RIO IN 14
CH 01
CH 02
CH 03
CH 04
CH 05
CH 06
CH 07
CH 08
IP: 10.20.100.21
YAMAHA QL1
CAD 5e
13
Netzwerk Switch
4x Shure QLXD4
1x Shure QLXD4
IN 1 - 4
IN 10
CH 09 - 12
CH 13
MIDI
opt. MADI
MIX 5
MIX 6
MIX 7/8
opt. MADI
11
12
10
9
24
UpLink
CAD 5e
Midi Licht In/Out
USB
Midi
MOTU Midiexpress XT
Midi
USB
CAD 5e
CAD 5e
Midi In/Out 2
RME Fireface UFX
Midi In/Out 1
Midi
CAD 5e
Mic Rec L/R
Mic Rec M
XLR
XLR
In 9/10
In 11
In 13/14
USB
SPDIF
VsK PoLi oben
VsK PoLi unten
SDI
Beamer FOH
Beamer Sturz
AchMom TV-Strecke
Maus
Black Magic Decklink Duo 2
Black Magic Decklink Duo 3
SDI
HDMI
DVI
HDMI
HDMI
HDMI
IP: 10.20.100.11
PC 1 (Audio)
Tastatur
USB
IP: 10.20.100.13
PC 2 (Video)
HDMI
Input 3
Out-put 1
HDMI
HDMI Switch
HDMI
USB
USB
KVM Switch
USB
USB
Display Port
NVidea Display 1
NVidea Display 4
NVidea Display 3
HDMI
V40
Input 4
PVW
Out-put 2
HDMI
Videofunk-strecken-sender
Empfänger
HDMI
Samsung Monitor
DVI
Display Port
USB
HDMI
DVI
DVI
Monitor
LG Monitor
Stream Deck
CAD 5e
Scene Monitor
CAD 5e